MS225
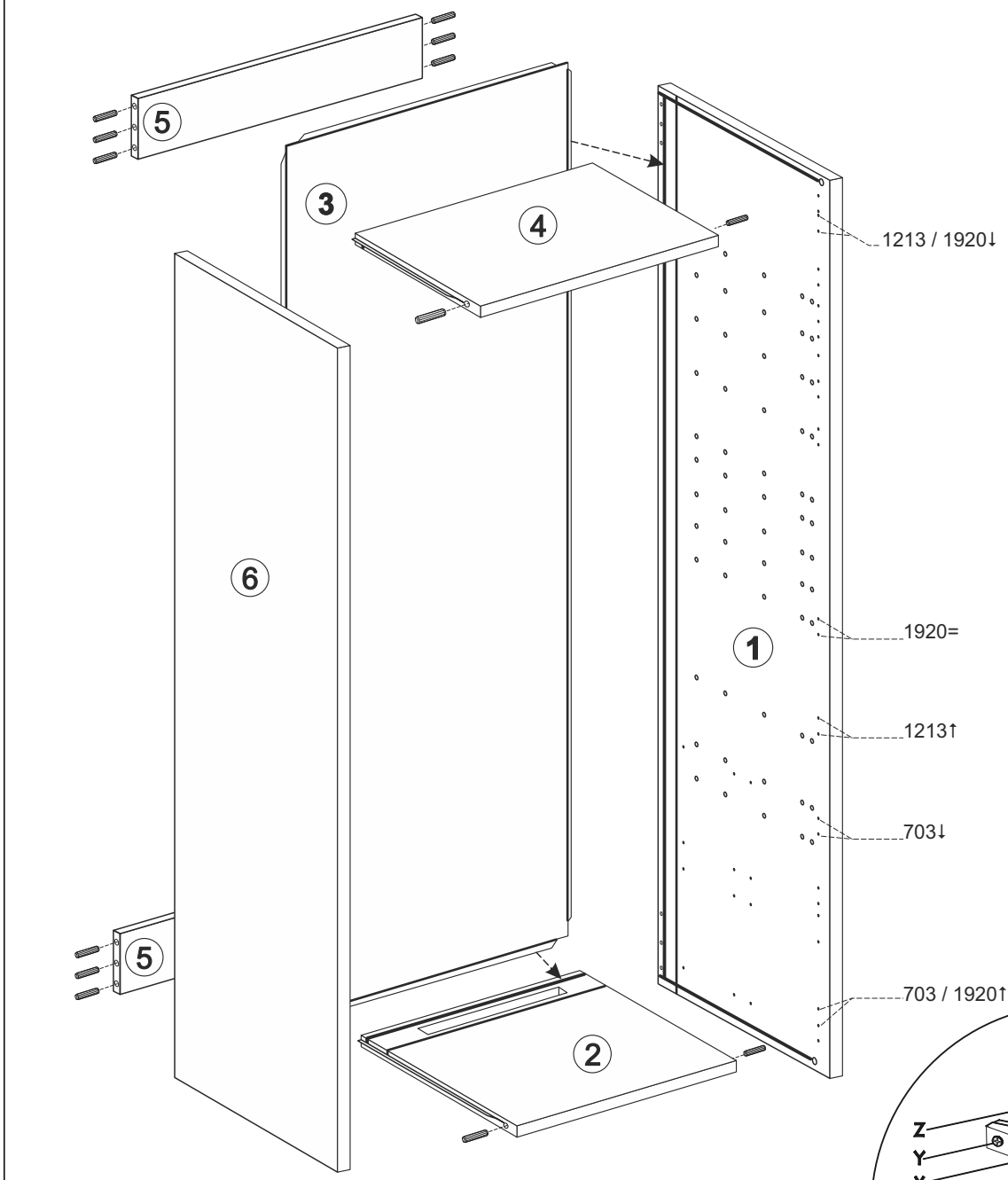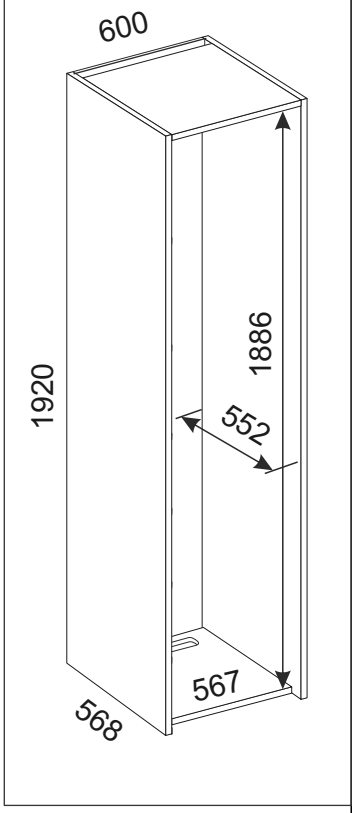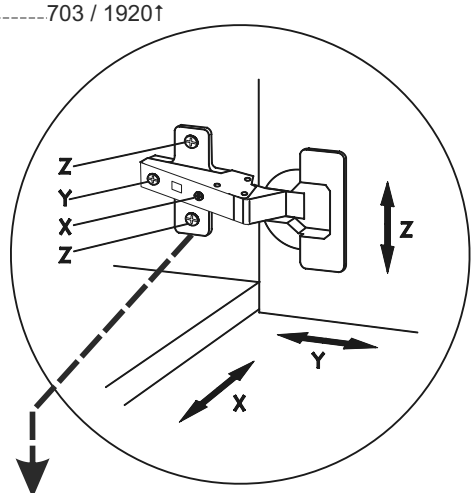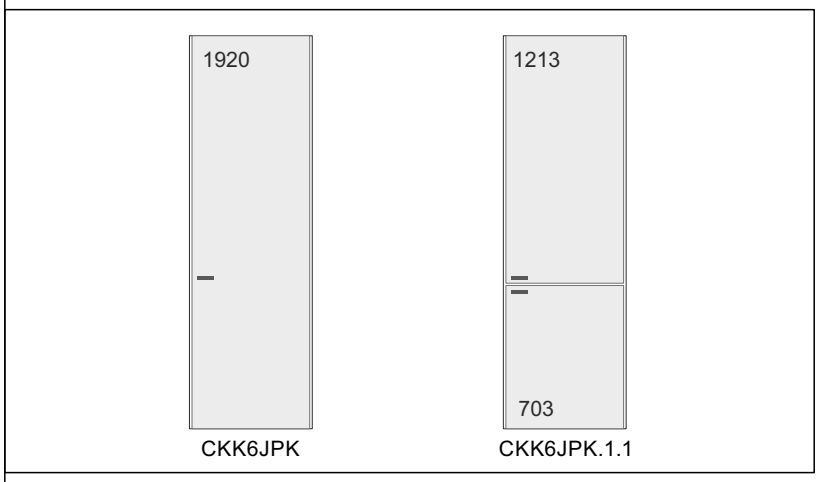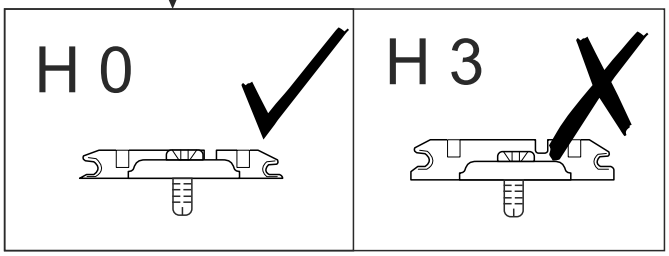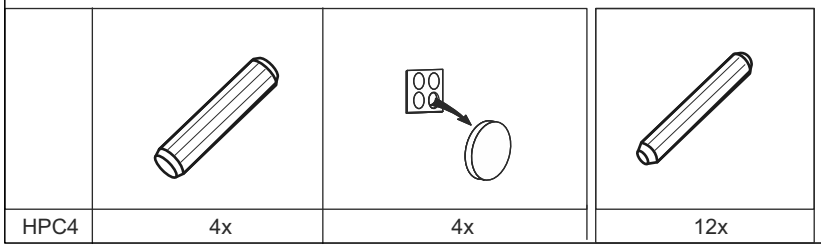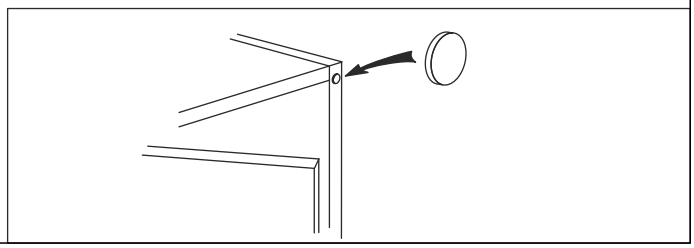
CKK6RINT1RE